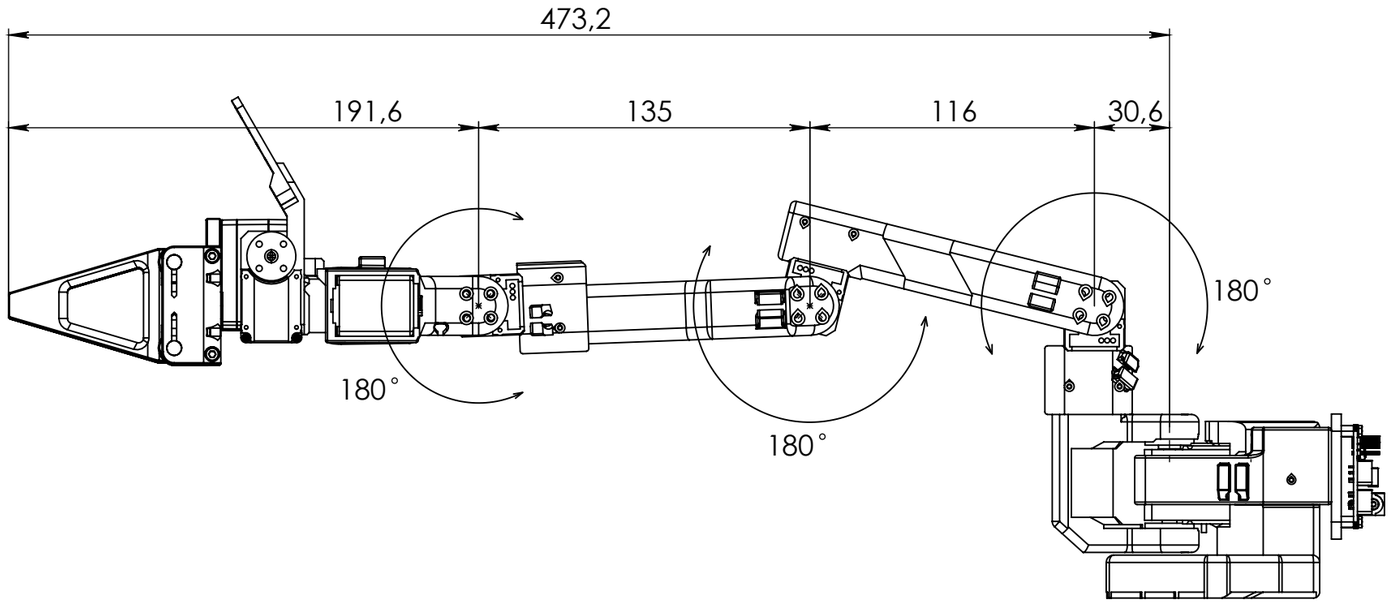

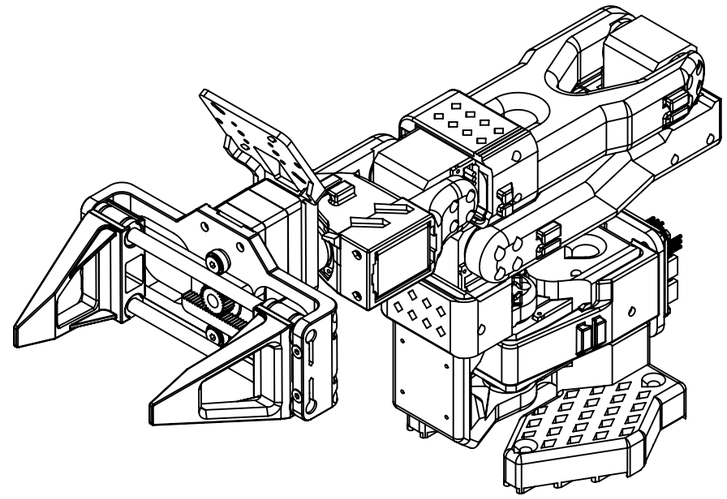

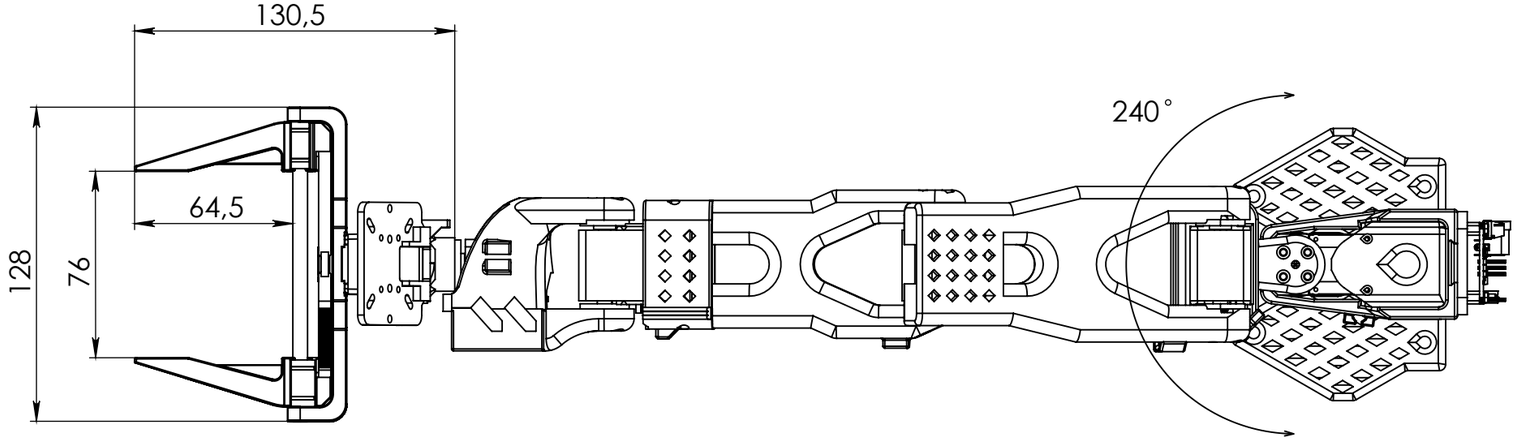

DOF	5
Reach	470mm
Span	940mm
Gripper Max	76mm
Payload	250g
Power Supply	12V - 10A
Weight	3.7kg

Material:

Finish:

Unless Otherwise Stated. All Dimensions: **mm**
General tolerance **(ISO 2768):**
Surface finish according to **ISO 1302**
Simplifies representation and dimensioning of holes - **ISO 15786**

Drawing Scale: **1:2.5**

Approx Weight: Kg

Surface Finish:

Projection Method: **FIRST ANGLE**

Sheet Size: **A3**

Workpiece edge according to **ISO 13175**

-0,25
0,80
+0,8
+0,1

Document Type: **Dimensional drawing**

Legal Owner: **Robo9**

Description: **SO-ARM101 with Parallel Gripper by Robo9**

Designed by: Alan Subin

Approved Date:

Checked/Approved by:

Released Date:

Part Number:

Used on:

Sheet: **1 of 1**

Revision: